GARDE

WORKSTEAD LANTERN
HARDWARE FINISH OPTIONS



HEWN BRASS



LOST BRASS



HAND FINISHED BRONZE



BRUSHED NICKEL

LOS ANGELES
ENGARDE@GARDESHOP.COM / **NEW YORK**
GARDENY@GARDESHOP.COM / **DALLAS**
GARDETX@GARDESHOP.COM

GARDE

LANTERN DEMI LARGE

hardwired

Description

LANTERN DEMI LARGE presents the primary geometries of our best-selling Lantern Collection via two sensuous forms. More discreet in drop-height, but still monumental in presence, both fixtures bring a transformative presence to spaces with lower ceilings. An offset dome rises towards a lyrical octagonal canopy, concealing the connection between fixture and ceiling, and creating an impression of luminous drapery above. 100% Dupioni Raw Silk is tailored over hand-crafted armatures and finished with an elegant tassel.

Hardware Finish Options

Hewn Brass
Lost Brass
Hand Finished Bronze
Brushed Nickel

Dimensions

Overall Fixture Height - 29”
Fixture Diameter - 42”
Shade Height - 22.5”
Tassel Length - 6.5”

Weight

6 lbs

Lamp

40 Watt Incandescent Max
(3) Tala Porcelain II E26/E27 Bulbs Included
3” Diameter With Porcelain Finish
6W Dimmable LED Bulb
50 Watt Incandescent Equivalent
540 Lumens Per Bulb
2700K Color Temperature
Bulb Life 15,000 Hours
110/120V, E26
220/240V, E27
UL/CE Listed
Damp Rated

front

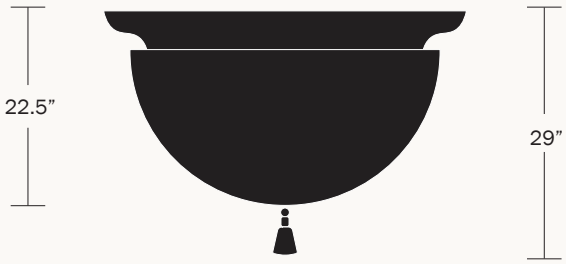

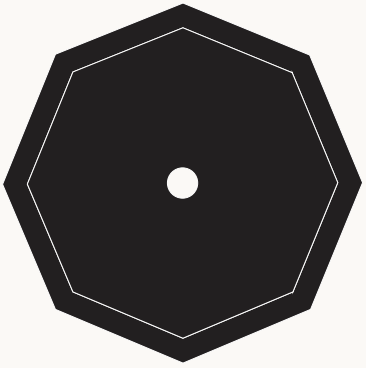

bottom

LOS ANGELES
ENGARDE@GARDESHOP.COM

NEW YORK
GARDENY@GARDESHOP.COM

DALLAS
GARDETX@GARDESHOP.COM

GARDE

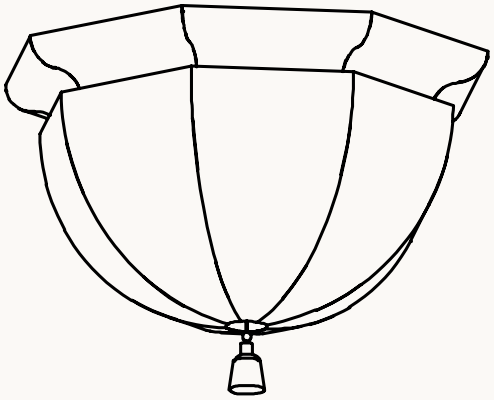

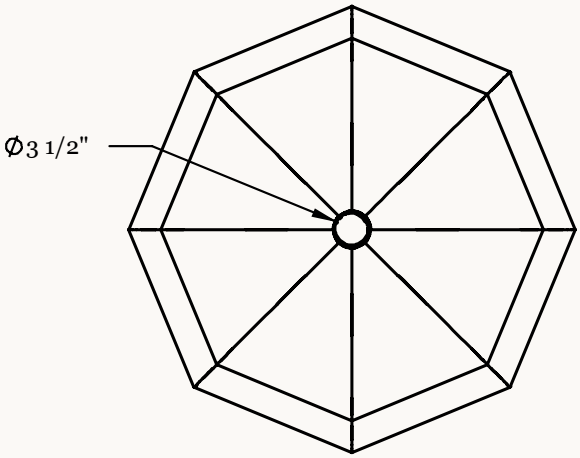

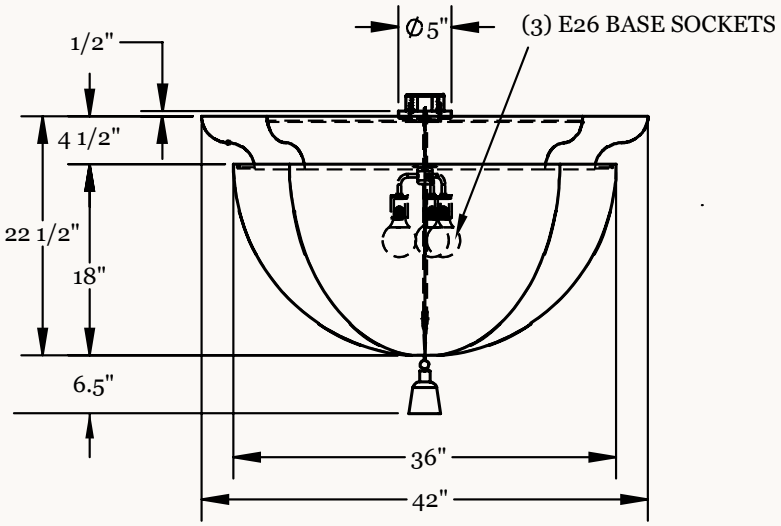

LOS ANGELES
ENGARDE@GARDESHOP.COM
NEW YORK
GARDENY@GARDESHOP.COM
DALLAS
GARDETX@GARDESHOP.COM