GARDE

WORKSTEAD LANTERN
HARDWARE FINISH OPTIONS



HEWN BRASS



LOST BRASS



HAND FINISHED BRONZE



BRUSHED NICKEL

LOS ANGELES
ENGARDE@GARDESHOP.COM / **NEW YORK**
GARDENY@GARDESHOP.COM / **DALLAS**
GARDETX@GARDESHOP.COM

GARDE

LANTERN DEMI SMALL

hardwired

Description

LANTERN DEMI SMALL presents the primary geometries of our best-selling Lantern Collection via two sensuous forms. More discreet in drop-height, but still monumental in presence, both fixtures bring a transformative presence to spaces with lower ceilings. An offset dome rises towards a lyrical octagonal canopy, concealing the connection between fixture and ceiling, and creating an impression of luminous drapery above. 100% Dupioni Raw Silk is tailored over hand-crafted armatures and finished with an elegant tassel.

Hardware Finish Options

Hewn Brass
Lost Brass
Hand Finished Bronze
Brushed Nickel

Dimensions

Overall Fixture Height - 18.5”
Fixture Diameter - 22”
Shade Height - 13”
Tassel Length - 5.5”

Weight

3.5 lbs

Lamp

40 Watt Incandescent Max
(1) Tala Porcelain II E26/E27 Bulb Included
3” Diameter With Porcelain Finish
6W Dimmable LED Bulb
50 Watt Incandescent Equivalent
540 Lumens Per Bulb
2700K Color Temperature
Bulb Life 15,000
Hours 110/120V, E12
220/240V, E14
UL/CE Listed
Damp Rated

front





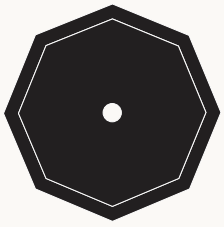

bottom

GARDE

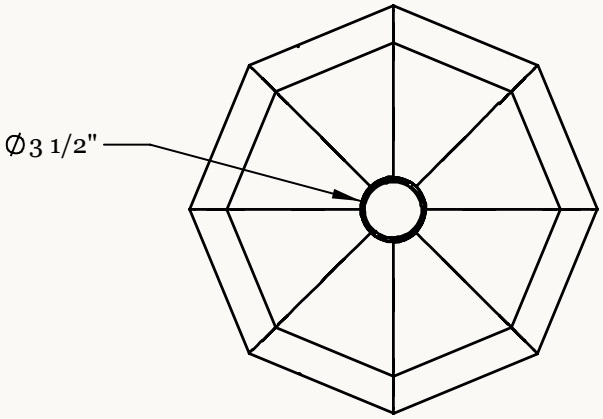

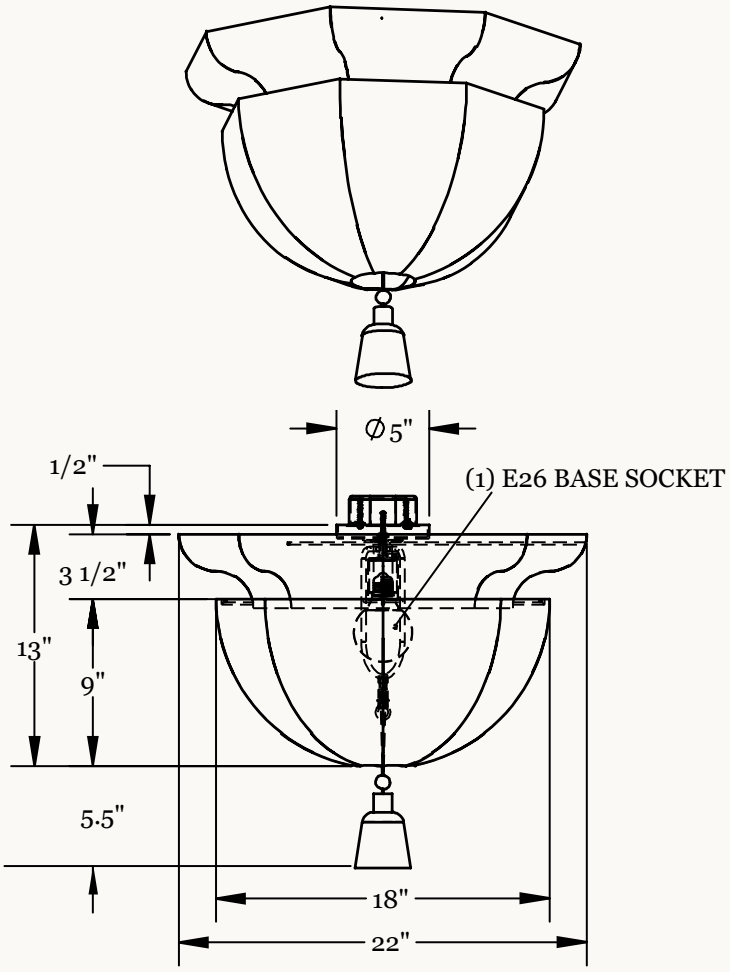

LOS ANGELES
ENGARDE@GARDESHOP.COM
NEW YORK
GARDENY@GARDESHOP.COM
DALLAS
GARDETX@GARDESHOP.COM