GARDE

MARQUIS TABLE LAMP RESIN







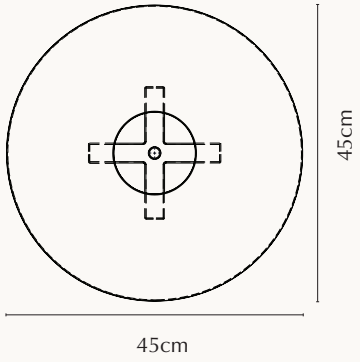

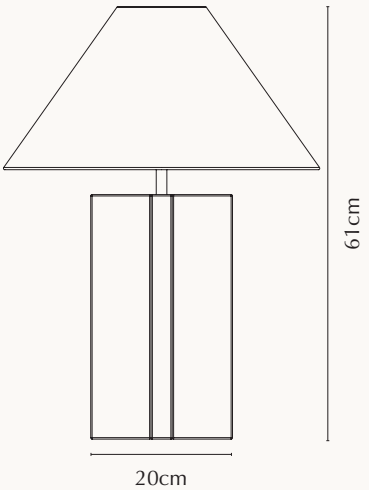

CONSTRUCTION

Cast resin base, plated brass capping & fittings, Linen fabric shade

ASSEMBLY

No assembly required. Globe not included.

Indoor Use Only

US Rating: 110-120 V~ 60 Hz

1 x Max. 9W LED Bulb E26 Type A

AU Rating: 220-240 V~ 50/60 Hz

1 x Max. 9W LED Bulb E27 Type A; Ta: 25°C

WARRANTY

2 Year Product warranty.

This does not cover general wear and tear.

AU Wiring is compliant to SAA standards. USA Wiring is compliant to UL standards. We do not cover electrical warranty or compliance for purchasers in other markets and wiring changes may be required to become locally compliant.

Made in Vietnam

HS Code: 94052100

DIMENSIONS

Overall:	45 x 45 x 61cm
Weight:	6kg

BOXED DIMENSIONS

Carton 1:	52 x 49 x 58cm
Weight:	10kg