GARDE

LOST PROFILE STUDIO REMNANT
CAST BRONZE OR ALUMINUM
FINISH OPTIONS



AGED BRONZE



DARK BRONZE



ALUMINUM

LOS ANGELES
ENGARDE@GARDESHOP.COM / **NEW YORK**
GARDENY@GARDESHOP.COM / **DALLAS**
GARDETX@GARDESHOP.COM

GARDE

SPECIFICATION SHEET

V1.0

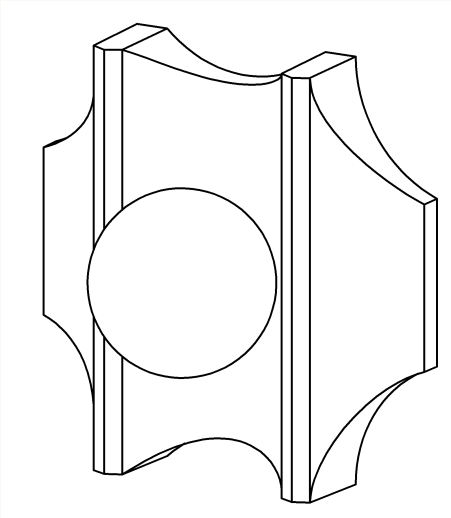

REMNANT SINGLE SCONCE

DESCRIPTION
Remnant is a sculptural sconce inspired by a fossilized clam shell, capturing the enduring beauty of nature's ancient forms.

MATERIALS
Cast Bronze or Cast Aluminium & Glass.

DIMENSIONS
Length: 140mm (5.5")
Depth: 71mm (2.8")
Height: 140mm (5.5")

WEIGHT
Bronze = 1.5kg (3.3lbs)
Aluminium = 0.8kg (1.8lbs)

LAMPING
LED G4 Globe

LED COLOUR TEMP
Warm White 2700k

VOLTAGE/WATTAGE
12V DC @ 3W

LUMENS/CRI
270lm
*From the source

DRIVER
12V 25W 0-10V DIMMABLE

STANDARD FINISHES
Bronze - Aged Bronze (Waxed)
Dark Bronze (Waxed)
Aluminum - Brushed

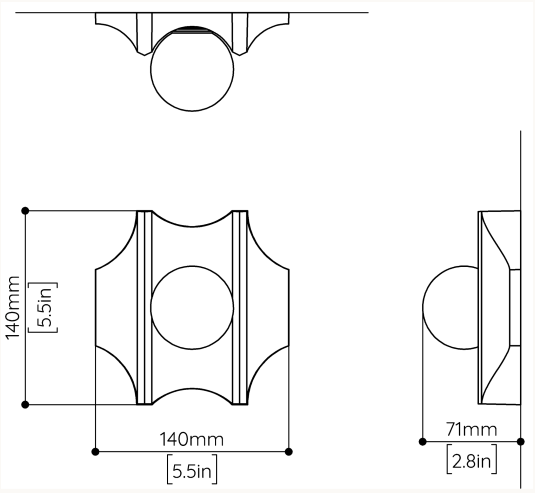

MAINTENANCE
All LOST PROFILE metal surfaces are waxed. These metal surfaces are designed to age and patinate. Wear gloves when handling to avoid hand prints.

DRIVERS & DIMMING
LOST PROFILE products are supplied with 0-10V dimmable LED drivers.
PHASE & DALI Dimmable drivers are available for some regions, upon request.
The location of the driver needs to be considered, whether in a ceiling cavity, in a wall cavity, or ideally in an accessible electrical cabinet.

PRICING & LEAD TIMES
Please contact us or your nearest LOST PROFILE representative for current pricing and lead times.

LOS ANGELES
ENGARDE@GARDESHOP.COM
NEW YORK
GARDENY@GARDESHOP.COM
DALLAS
GARDETX@GARDESHOP.COM