

GARÐE

LUTETIA PENDANT WITH TUBES

Conceived as a plaster monolith suspended with patinated brass tubes. Also available with nearly invisible cables. Custom-made up to 300 cm.

Finishes / plaster



White plaster

Finishes / patinated brass



Light bronze (GL01)



Dark bronze (GL02)

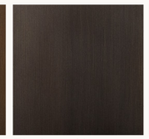

Blackened bronze (GL03)

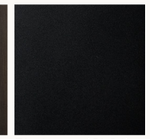

Black matt (GL04)



Old nickel (GL05)



Polished nickel (GL06)

Canopy (in patinated brass)



Technical Specifications

Dimensions	Diam. 10 cm (3.9 in) × Length on request up to 300 cm (118.1 in) × Height on request	
Materials	plaster / brass details	
Weight	L 130 cm (51 in) 10 kg / 22 lbs	
Lamping	LED strip - 23W/m - 2500 lm/m - 2700K - dimmable. The driver must be remote.	
Voltage	EU: 220–240 V	US: 120 V
Certifications	CE	ETL
Protection	IP20 standard	Dry location
Flush-mounted electrical box	N/A	
Lead time	12 - 14 weeks	

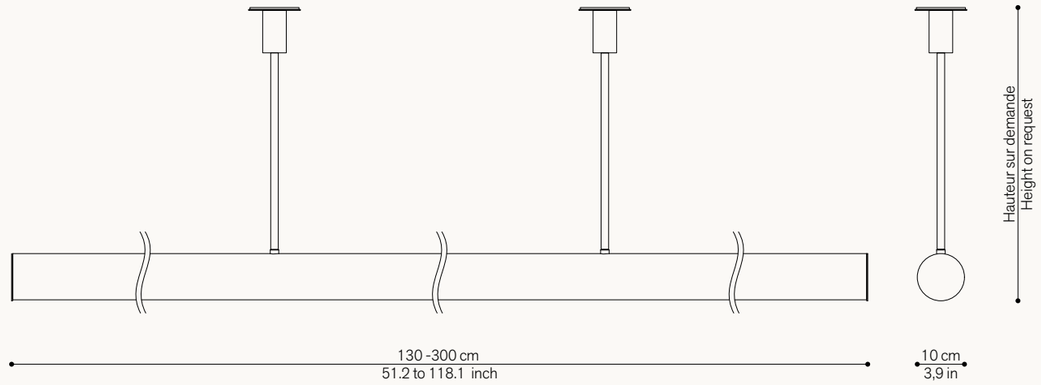

LUTETIA PENDANT WITH TUBES