LEE BROOM

MINI CRESCENT LIGHT

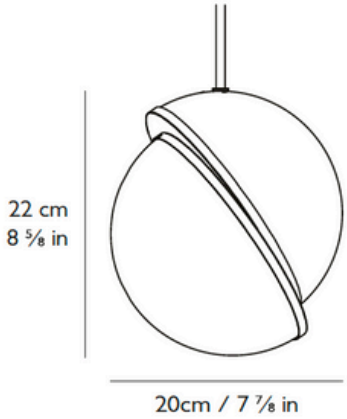

PRODUCT DETAILS

Name

Mini Crescent Light

Finish & Product Code	110-130v	220-240v
Mini Crescent Light	CRE0140	CRE0040

Materials

Opal acrylic, brushed brass, steel

Illumination 110-130v

Bulb: E26, 9w LED, 2700k, 800 lumen, 25k hrs (1x supplied), CRI 80

Illumination 220-240v

Bulb: E27, 4.2w LED, 2700k, 470 lumen, 15k hrs (1x supplied), CRI 80

Dimming

Dimmable. Mains voltage. TRIAC / Leading edge

Certification

UL, cUL (110-130v)
CE, CB (220-240v)

Year of Design

2016

Dimensions

H 22cm x Dia 20cm / H 8 ⅝ in x Dia 7 ⅞ in

Suspension

Length: 300cm / 118 ⅛ in
Adjustable cord
Gold fabric outer

Ceiling Plate / Canopy

H 3cm x Dia 12cm / H 1 ⅛ in x Dia 4 ¾ in
Round steel in brushed brass finish

Weight

Product (net) 1.1kg / 2.4 lb / Boxed (gross) 1.85kg / 4 lb